INDUSTRIAL ROTATOR **CPR14-01**

(PATENTED)

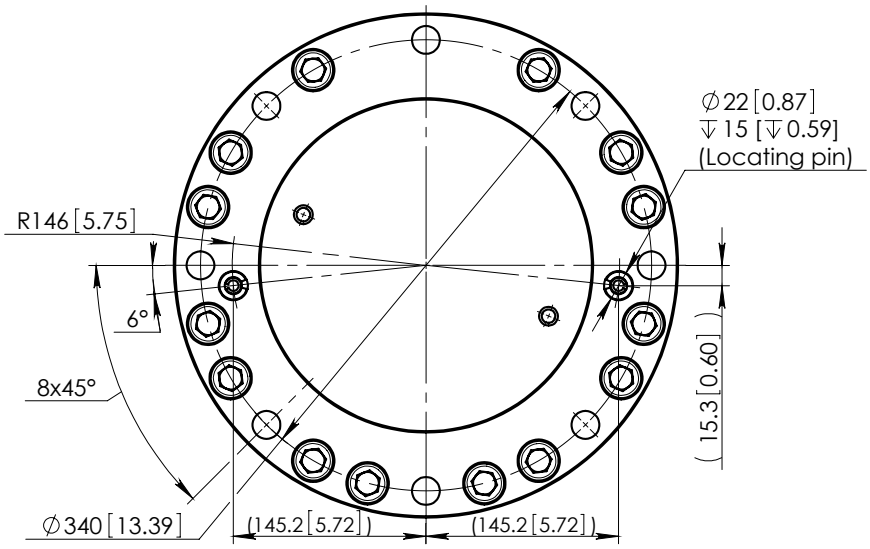

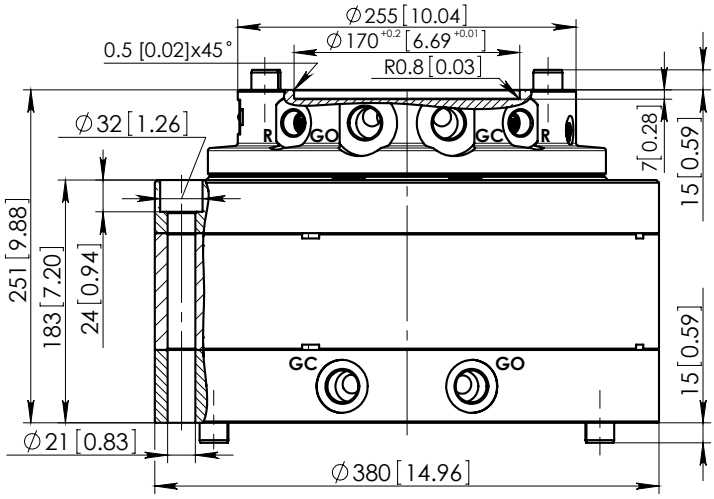

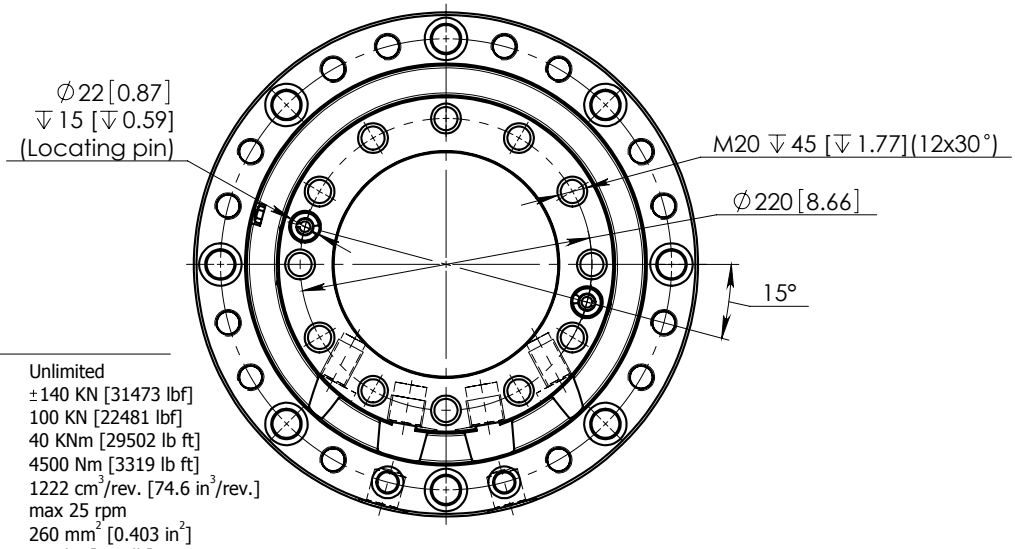

Technical data

Rotation	Unlimited
Max axial load	±140 KN [31473 lbf]
Max radial load	100 KN [22481 lbf]
Moment of deflection	40 KNm [29502 lb ft]
Torque at 25 Mpa	4500 Nm [3319 lb ft]
Rated displacement	1222 cm^3/rev. [74.6 in^3/rev.]
Rotation speed	max 25 rpm
Oil duct area for grapple	260 mm^2 [0.403 in^2]
Weight	172 kg [379 lb]

Function	Max working pressure	Rec oilflow	Connection
R - rotation	25 MPa [3625 psi] *	35 l/min [9.2 gal(US)/min]	G 1/2
GO - grapple/tool open	35 MPa [5076 psi]		G 3/4
GC - grapple/tool close	35 MPa [5076 psi]		G 3/4

* Relief valves fitted

Sheet 1 of 1

10.08.2012

BALTROTORS

Instituta Street - 1, Salaspils. Riga region, LATVIA LV-2169
Phone: +(371) 67 981074, Fax: +(371) 67 981075
E-mail: baltrotors@baltrotors.lv